# FUEL SYSTEM

## VARIABLE VENTURI

# 1. SPECIFICATIONS

## GENERAL SPECIFICATIONS – 1991 MODEL

| Vehicle model | | Engine | Trans-mission | Carburetor | | | | Cold mixture heater |
|---|---|---|---|---|---|---|---|---|
| | | | | Type | Identification No. | Choke type | Fuel cut solenoid | |
| EC | Colt Lancer/ (C51V, C51A, C52A, C61A, C62A) | 4G13 | M/T | A | 31A 1 | Automatic (Wax type) | X | – |
| | | 4G15 | M/T | A | 51A 1 | Automatic (Wax type) | X | – |
| | | | A/T | A | 51B 1 | Automatic (Wax type) | X | – |
| | Lancer station wagon | 4G15 | M/T | A | 51A 1 | Automatic (Wax type) | X | – |
| | | | A/T | A | 51B 1 | Automatic (Wax type) | X | – |
| Australia | Lancer (C62A) | 4G15 | M/T | A | 53G 1 | Automatic (Wax type) | X | – |
| | | | A/T | A | 53H 1 | Automatic (Wax type) | X | – |

| Vehicle model | Engine | Trans-mission | Carburetor | Cold mixture |
|---|---|---|---|---|

## GENERAL SPECIFICATIONS – 1992 MODELS

| Vehicle model | | Engine | Trans-mission | Carburetor | | | | Cold mixture heater |
|---|---|---|---|---|---|---|---|---|
| | | | | Type | Identification No. | Choke type | Fuel cut solenoid | |
| EXP | Colt/ Lancer (CA1A, CA2A, CB1A, CB2A) | 4G13 | M/T | A | 32H 1 | Automatic (Wax type) | X | – |
| | | | | A | 12F 1 | Automatic (Wax type) | X | – |
| | | | A/T | A | 32J 1 | Automatic (Wax type) | X | – |

Carburetor

| Vehicle model | | Engine | Trans-mission | Carburetor | | | | Cold mixture heater |
|---|---|---|---|---|---|---|---|---|
| | | | | Type | Identification No. | Choke type | Fuel cut solenoid | |
| EXP | Colt/ Lancer (CA1A, CA2A | 4G13 | A/T | A | 32J 1 | Automatic (Wax type) | X | – |
| | | | | A | 12G 1 | Automatic | X | – |

## GENERAL SPECIFICATIONS – 1995 MODELS

| Vehicle model | | Engine | Trans-mission | Carburetor | | | | Cold mixture heater |
|---|---|---|---|---|---|---|---|---|
| | | | | Type | Identification No. | Choke type | Fuel cut solenoid | |
| EXP | Lancer station wagon (CB1W, CB2W) | 4G13 | M/T | A | 32H 1 | Automatic (Wax type) | X | – |
| | | | | A | 12F 1 | Automatic (Wax type) | X | – |
| | | | A/T | A | 32J 1 | Automatic (Wax type) | X | – |
| | | | | A | 12G 1 | Automatic (Wax type) | X | – |
| | | | M/T | A | 22C 1 | Automatic (Wax type) | X | – |
| | | | | A | 38H 1 | Automatic | X | – |

| Vehicle model | | Engine | Trans-mission | Carburetor | | | | Cold mixture heater |
|---|---|---|---|---|---|---|---|---|
| | | | | Type | Identification No. | Choke type | Fuel cut solenoid | |
| GCC | Lancer station wagon (CB1W, CB2W) | 4G13 | M/T | A | 34H 1 | Automatic (Wax type) | X | – |
| | | | A/T | A | 35J 1 | Automatic (Wax type) | X | – |
| | | | M/T | A | 27D 1 | Automatic (Wax type) | X | – |
| | | 4G15 | M/T | A | 64A 1 | Automatic (Wax type) | X | – |
| | | | A/T | A | 64B 1 | Automatic (Wax type) | X | – |

## GENERAL SPECIFICATIONS – 1996 MODELS

| Vehicle model | | Engine | Trans-mission | Carburetor | | | | Cold mixture heater |
|---|---|---|---|---|---|---|---|---|
| | | | | Type | Identification No. | Choke type | Fuel cut solenoid | |
| Australia | Colt/ Lancer (CA2A, CB2A) | 4G15 | M/T | A | 83B 1 | Automatic (Wax type) | X | – |
| | | | A/T | A | 83C 1 | Automatic (Wax type) | X | – |
| GCC | Colt/ Lancer (CA1A, CA2A, CB1A | 4G13 | M/T | A | 34H 1 | Automatic (Wax type) | X | – |
| | | | A/T | A | 35J 1 | Automatic (Wax type) | X | – |

## GENERAL SPECIFICATIONS – 1997 MODELS

## CARBURETOR SPECIFICATIONS

| Carburetor identification No. | Throttle bore mm (in.) | Main jet mm (in.) | Dash pot | Throttle position sensor |
|---|---|---|---|---|
| 12F 1 | 42 (1.654) | 3 (0.118) | – | – |
| 12G 1 | 42 (1.654) | 3 (0.118) | Conventional type | – |
| 14C 1 | 42 (1.654) | 3 (0.118) | – | – |
| 18F 1 | 42 (1.654) | 3 (0.118) | – | – |
| 18G 1 | 42 (1.654) | 3 (0.118) | Conventional | |

# VARIABLE VENTURI CARB – Specifications

| Carburetor | Throttle bore | Main jet | Dash pot | Throttle |
|---|---|---|---|---|

Intentionally blank

© Mitsubishi Motors Corporation Aug. 1992

| Carburetor | Main jet | Mixture | Float level adjustment |
|---|---|---|---|

| Carburetor identification No. | Main jet adjusting screw initial set value mm (in.) | Mixture adjusting screw initial set value mm (in.) | Float level adjustment | |
|---|---|---|---|---|
| | | | Needle valve to float lever clearance mm (in.) | Float to air horn clearance mm (in.) |
| 82A 1 | 3.2 – 4.6 (0.126 – 0.181) | 7.8 – 9.2 (0.307 – 0.362) | 1.0 (0.039) | 4.3 (0.169) |
| 82J 1 | –* | –* | 1.0 (0.039) | 4.3 (0.169) |
| 82K 1 | –* | –* | 1.0 (0.039) | 4.3 (0.169) |
| 83B 1 | –* | –* | 1.0 (0.039) | 4.3 (0.169) |

NOTES

## 2. SPECIAL TOOLS

| Tool | Number | Name | Use |
|---|---|---|---|
| 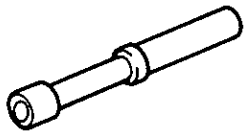 | MD998299 | MAS driver | Adjustment of idle mixture and removal and installation of MAS |

NOTES

# 3. FUEL PUMP

## REMOVAL AND INSTALLATION

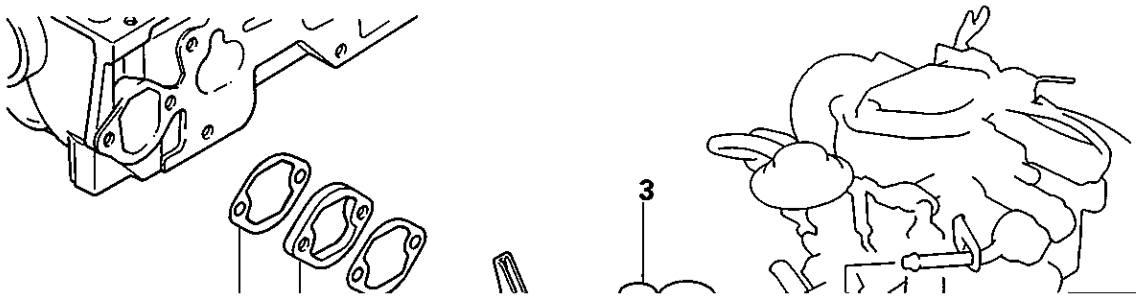

NOTES

# 4. CARBURETOR ASSEMBLY

## REMOVAL AND INSTALLATION – Types "A" and "B"

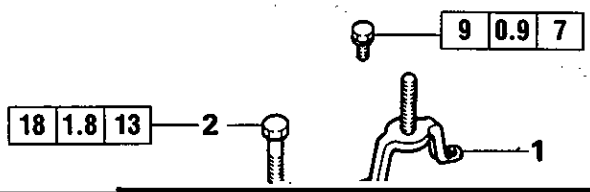

Type A

Upper gasket

Lower gasket

## SERVICE POINT OF INSTALLATION

### ▶A◀ INSTALLATION OF LOWER GASKET / INSULATOR / UPPER GASKET / CARBURETOR

<Where the upper is of fiber type>

(2) Set the lower gasket, insulator, upper gasket and the carburetor on the intake manifold along the guide rods. At this time, note that the lower gasket, insulator and upper gasket are so installed that their respective identification

NOTES

# 5. CARBURETOR – Types "A" and "B"

## DISASSEMBLY AND REASSEMBLY

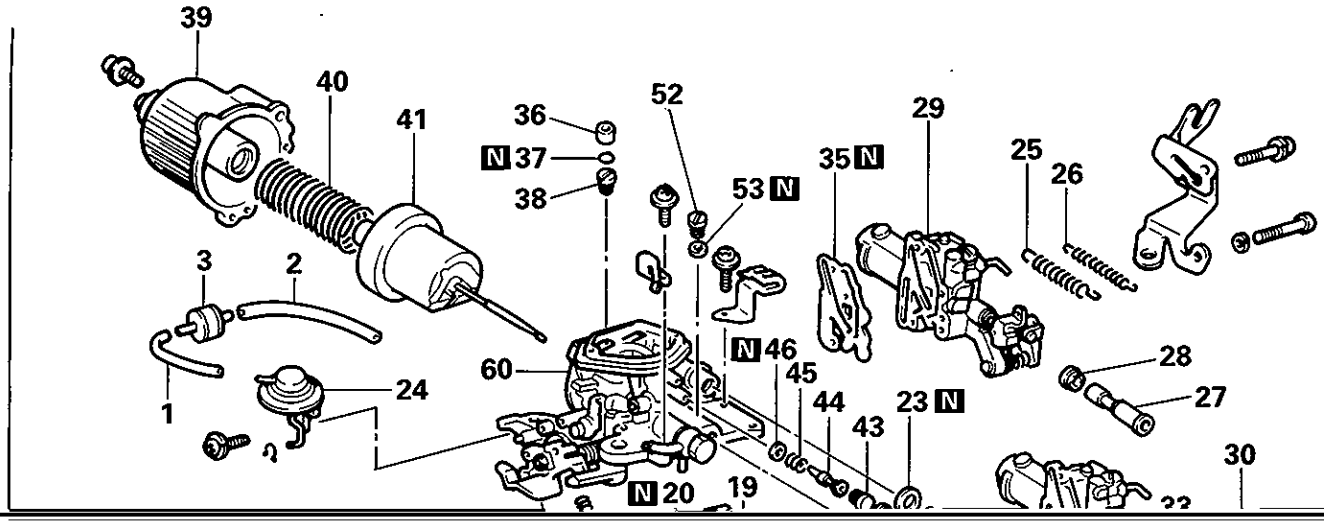

## SERVICE POINTS OF DISASSEMBLY

## ⟨E⟩ REMOVAL OF COMPENSATOR

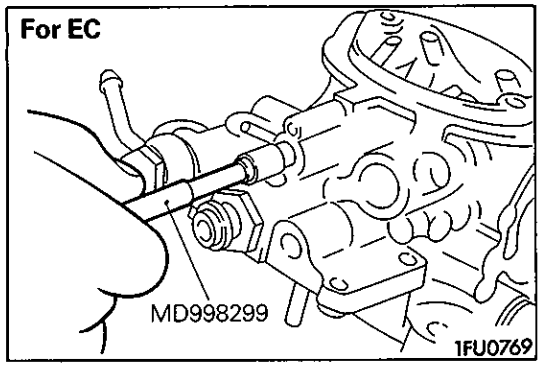


### ◊I◊ REMOVAL OF MIXTURE ADJUSTING SCREW (MAS)

(1) Using the special tool (MAS Driver), remove the idle limiter cap and the MAS.

### ◊J◊ REMOVAL OF MAIN JET ADJUSTING SCREW

(1) Holding the main jet adjusting screw with pliers, turn it

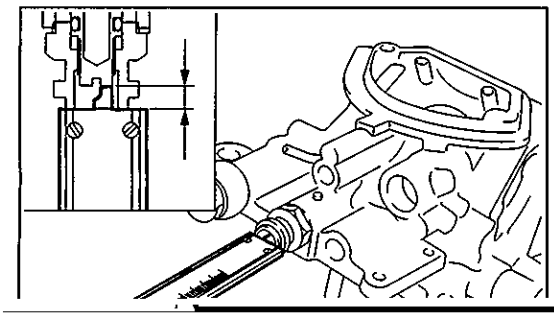

(3) Install the main jet plug into the carburetor body through the gasket.
(4) Make the initial setting of the main jet adjusting screw by using a slide caliper.

NOTE
Refer to the table in SERVICE SPECIFICATIONS for the set value.

### INSTALLATION OF FLOAT / PIN

(1) When assembling these parts, make the float level adjustment.
(2) For adjustment of the float level, see the following.